Operación de Máquinas de Termoformado

Conalep San José Iturbide

Sheet 4

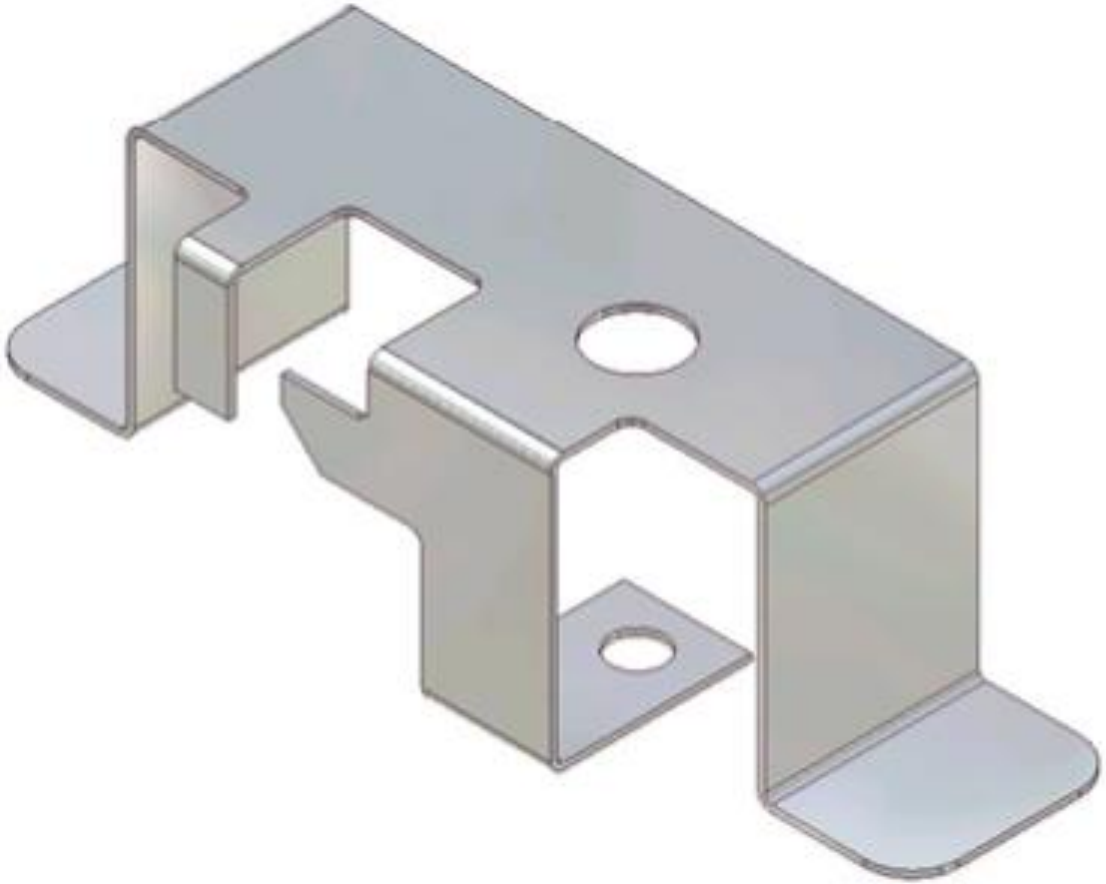

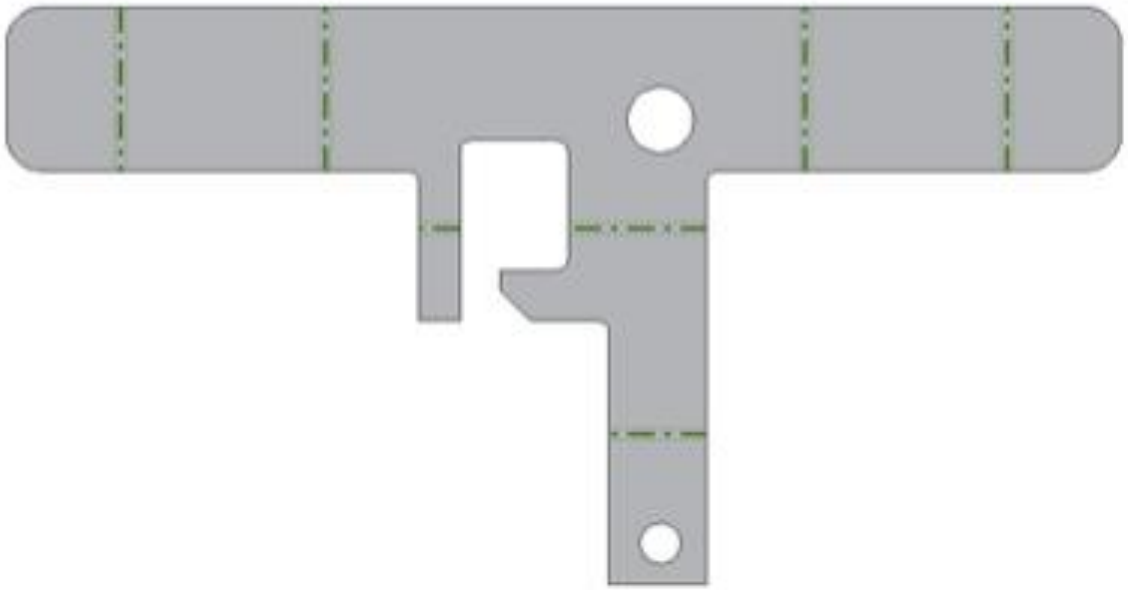

Sheet 4

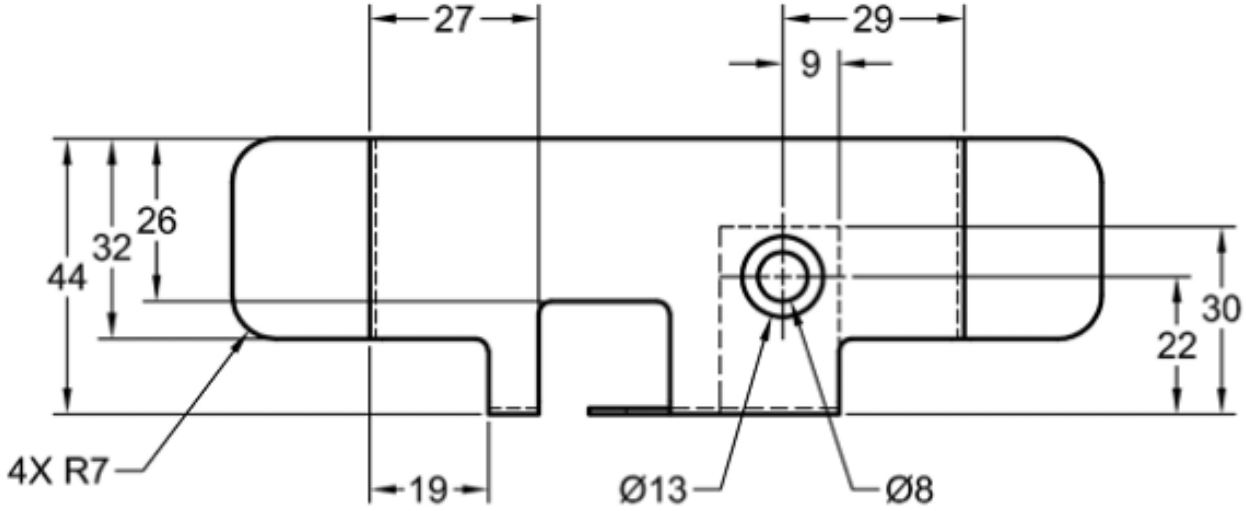

SHEET THICKNESS 1 MM
BEND RADIUS 1 MM
CORNER RADIUS 2 MM

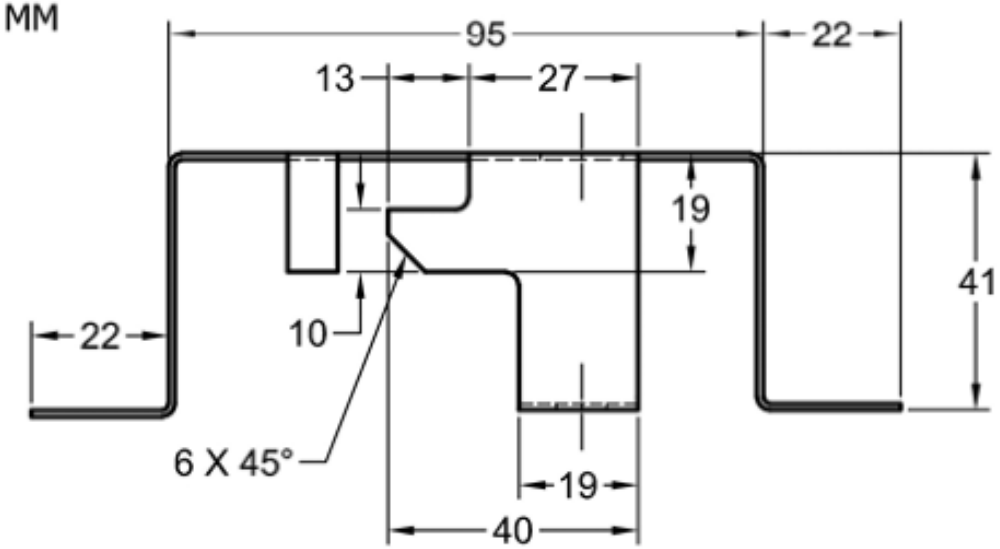

Sheet 5

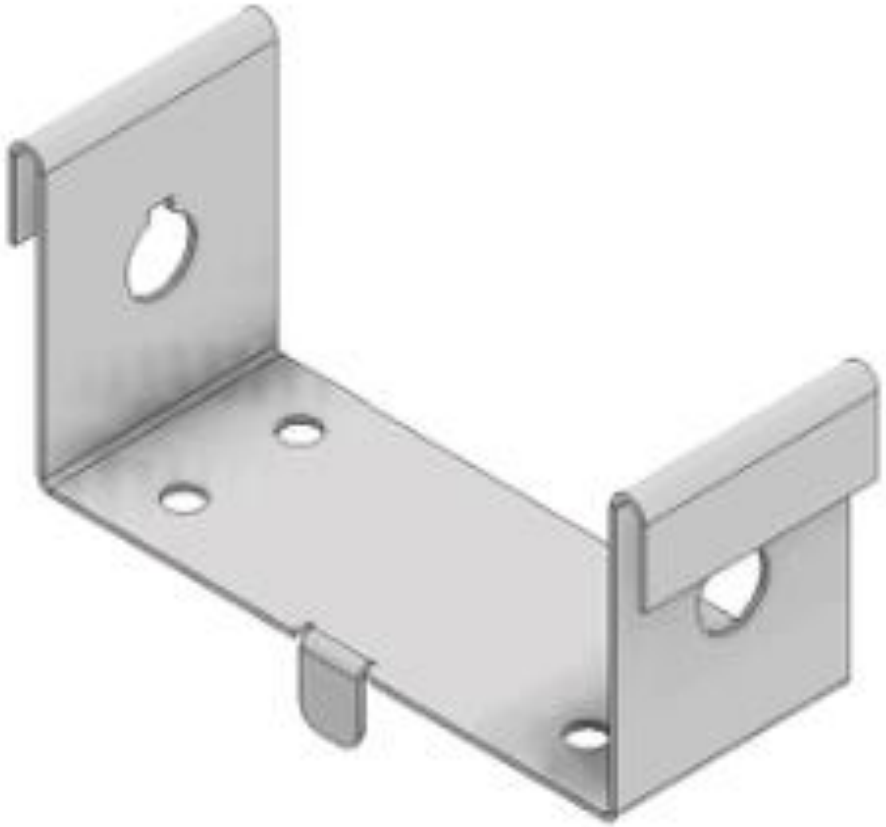

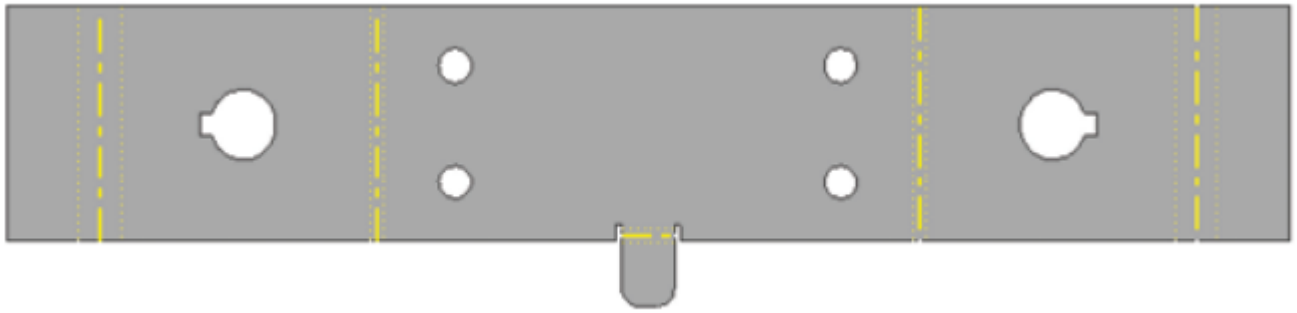

Sheet 5

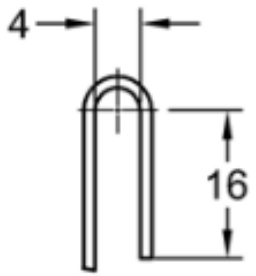

DETAIL A
SCALE 2:1

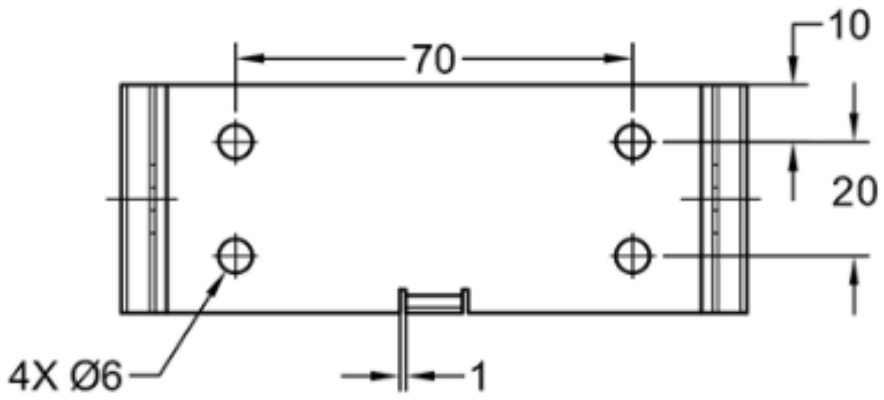

SHEET THICKNESS =1MM
BEND RADIUS =1MM

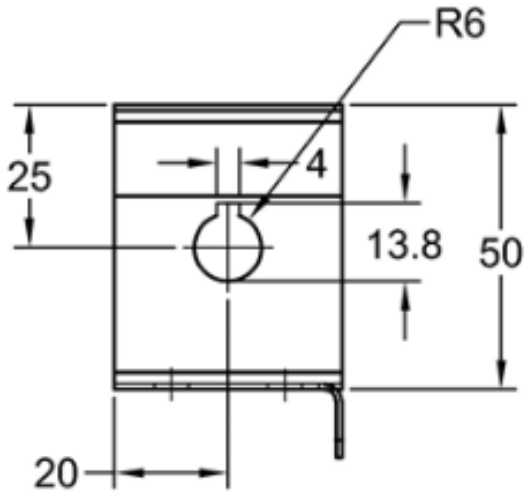

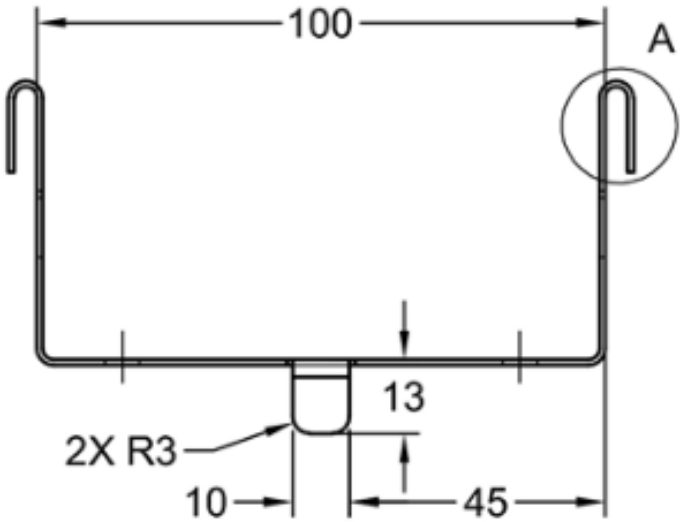

Sheet 6

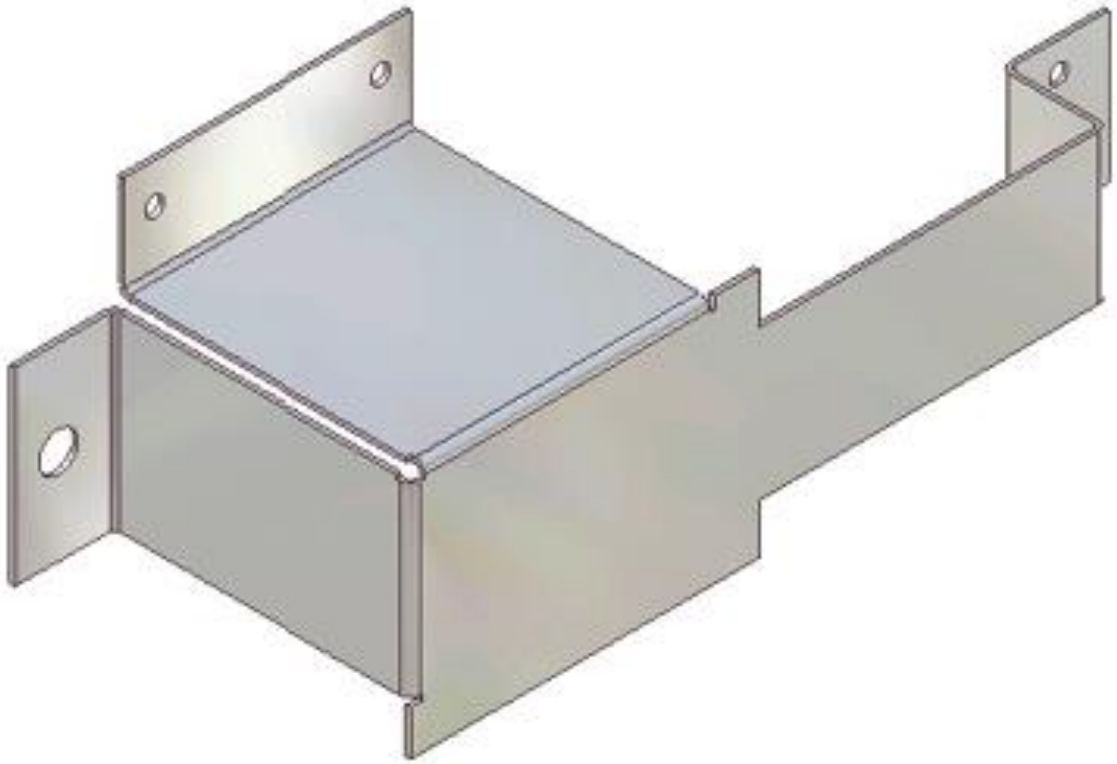

Sheet 6

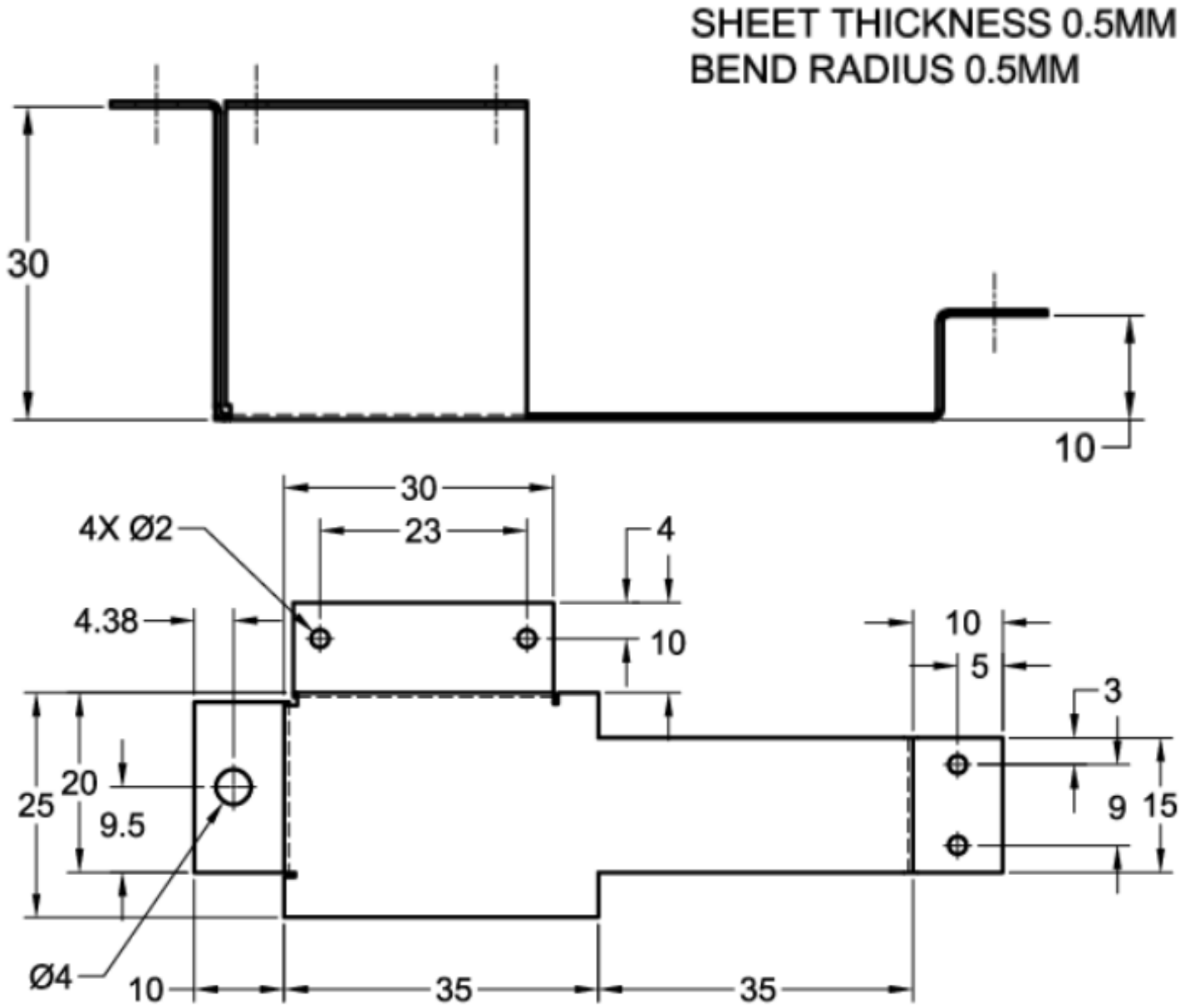
SHEET THICKNESS 0.5MM
BEND RADIUS 0.5MM
30
10
30
23
4X Ø2
4
4.38
10
10
5
3
25
20
9.5
9
15
Ø4
10
35
35